Model M3345CBM

Common Bus Module

Customer Reference Manual

Web: www.bonitron.com • Tel: 615-244-2825 • Email: info@bonitron.com

Bonitron, Inc.
Nashville, TN

An industry leader in providing solutions for AC drives.

ABOUT BONITRON

Bonitron designs and manufactures quality industrial electronics that improve the reliability of processes and variable frequency drives worldwide. With products in numerous industries, and an educated and experienced team of engineers, Bonitron has seen thousands of products engineered since 1962 and welcomes custom applications.

With engineering, production, and testing all in the same facility, Bonitron is able to ensure its products are of the utmost quality and ready to be applied to your application.

The Bonitron engineering team has the background and expertise necessary to design, develop, and manufacture the quality industrial electronic systems demanded in today's market. A strong academic background supported by continuing education is complemented by many years of hands-on field experience. A clear advantage Bonitron has over many competitors is combined on-site engineering labs and manufacturing facilities, which allows the engineering team to have immediate access to testing and manufacturing. This not only saves time during prototype development, but also is essential to providing only the highest quality products.

The sales and marketing teams work closely with engineering to provide up-to-date information and provide remarkable customer support to make sure you receive the best solution for your application. Thanks to this combination of quality products and superior customer support, Bonitron has products installed in critical applications worldwide.

AC Drive Options

In 1975, Bonitron began working with AC inverter drive specialists at synthetic fiber plants to develop speed control systems that could be interfaced with their plant process computers. Ever since, Bonitron has developed AC drive options that solve application issues associated with modern AC variable frequency drives and aid in reducing drive faults. Below is a sampling of Bonitron's current product offering.

World Class Products

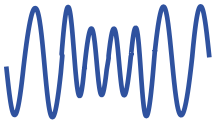

Undervoltage Solutions

Uninterruptible Power for Drives
(DC Bus Ride-Thru)
Voltage Regulators
Chargers and Dischargers
Energy Storage

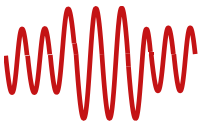

Overvoltage Solutions

Braking Transistors
Braking Resistors
Transistor/Resistor Combo
Line Regeneration
Dynamic Braking for Servo Drives

Common Bus Solutions

Single Phase Power Supplies
3-Phase Power Supplies
Common Bus Diodes

Portable Maintenance Solutions

Capacitor Formers
Capacitor Testers

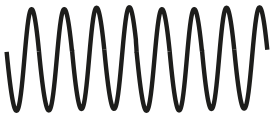

Power Quality Solutions

12 and 18 Pulse Kits

Green Solutions

Line Regeneration

1. INTRODUCTION 7
1.1. Who Should Use 7
1.2. Purpose and Scope 7
1.3. Manual Version and Change Record 7
Figure 1-1: M3345CBM-90N2 7
2. PRODUCT DESCRIPTION / FEATURES 9
2.1. Related Docs / Products 9
2.2. Part Number Breakdown 9
Figure 2-1: Example of M3345CBM Part Number Breakdown 9
Table 2-1: Chassis Codes 10
2.3. General Specifications 10
Table 2-2: General Specifications Chart 10
2.4. General Precautions and Safety Warnings 11
3. INSTALLATION INSTRUCTIONS 13
3.1. Environment 13
3.2. Unpacking 13
3.3. Mounting 13
3.4. Wiring and Customer Connections 13
3.4.1. Power Wiring 13
Table 3-1: Power Wiring Specifications 13
3.4.2. I/O Wiring (X Chassis Only) 14
Table 3-2: I/O Wiring Specifications 14
3.5. Typical Configurations 15
Figure 3-1: Typical Field Wiring 15
4. OPERATION 17
4.1. Functional Description 17
4.2. Startup 17
4.2.1. Pre-Power Checks 17
4.2.2. Startup Procedure And Checks 17
4.3. Operational Adjustments 17
5. MAINTENANCE AND TROUBLESHOOTING 19
5.1. Troubleshooting 19
5.1.1. Circulating currents between drives 19
5.1.2. Drive will not Precharge 19
5.1.3. Heatsink gets excessively hot 19
5.1.4. Drive Overvoltage fault. 19
5.1.5. Diode Module is Overheating 19
5.1.6. Drive voltage varies from common bus voltage 19
5.2. Technical Help – before you call 19
6. ENGINEERING DATA 21
Table 6-1: M3345CBM Diode Module Load Ratings 21
Table 6-2: M3345CBM Diode Module Fuses and Watt Loss 22
6.1. Dimensions and Mechanical Drawings 23
Figure 6-1: Typical “H” Chassis 23
Figure 6-2: Typical “J” Chassis 23
Figure 6-3: Typical “L” Chassis 24
Figure 6-4: Typical “N” Chassis 25
Figure 6-5: Typical “P” Chassis 27
Figure 6-6: Typical “P2” Chassis 28
Figure 6-7: Typical “X” Chassis 28
6.2. Supplemental Drawings 30
Figure 6-8: P6 Chassis Connections for Six Drives, with Wiring 30

Figure 6-9: P4 Chassis Connections for Four Drives, with Wiring 31
7. APPENDIX 33
7.1. Application Notes 33
7.2. Installation Notes 33
7.2.1. DC Bus Inductance 33
7.2.2. AC Supply and Precharge 33
7.2.3. Sizing 34

This page intentionally left blank

1. INTRODUCTION

1.1. WHO SHOULD USE

This manual is intended for use by anyone who is responsible for integrating, installing, maintaining, troubleshooting, or using this equipment.

Please keep this manual for future reference.

1.2. PURPOSE AND SCOPE

This manual is a user's guide for the Model M3345CBM (Common Bus Module). It will provide the user with the necessary information to successfully install, integrate, and use the M3345CBM in an AC variable frequency drive system.

In the event of any conflict between this document and any publication and/or documentation related to the AC drive system, the latter shall have precedence.

1.3. MANUAL VERSION AND CHANGE RECORD

250A and 350A models were added in Rev 03b.

Minor format changes were made in Rev 03c.

Additional sizing information was added to the Appendix of Rev 03d.

Additional supplemental figures added in Rev 03e.

Update to the manual template in Rev 03f.

Section 2.1, Table 2-2, Table 6-1 were updated and Fig. 6-8 was added in Rev 03g.

Updated table 6-2 in Rev 03h.

Figure 1-1: M3345CBM-90N2

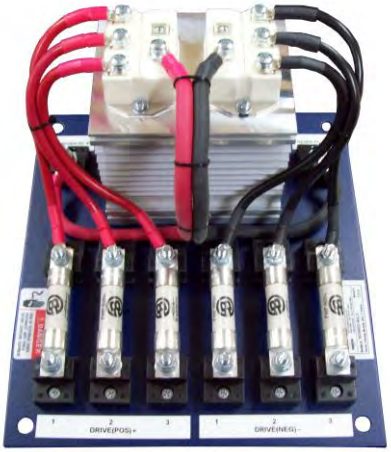

This page intentionally left blank

2. PRODUCT DESCRIPTION / FEATURES

Bonitron's M3345CBM (Common Bus Module) is used in common bus systems where there are multiple drives with separate AC inputs. In these cases, the parallel input bridges can cause circulating currents between the bridges, and they may not share equally because of differences in the input rectifiers. This may cause current to enter one drive, and return from another to the input AC line.

These circulating currents can cause nuisance trips due to false ground fault detections, or poor bridge sharing with drive overheating and shortened component life.

The back to back diodes in the M3345CBM adds four solid state junctions between the drives, overcoming the smaller differences between the bridges, and stopping the circulating currents.

2.1. RELATED DOCS / PRODUCTS

M3345D Steering Diode Modules for multiple drive applications sharing common regenerative braking.

M3460D Diode Steering Modules for multiple drive applications sharing common DC backup systems. (Used with Bonitron M3534 and M3460 Ride-Thru Modules)

M3612RC Bus Snubbing Modules for DC bus filtering.

2.2. PART NUMBER BREAKDOWN

Figure 2-1: Example of M3345CBM Part Number Breakdown

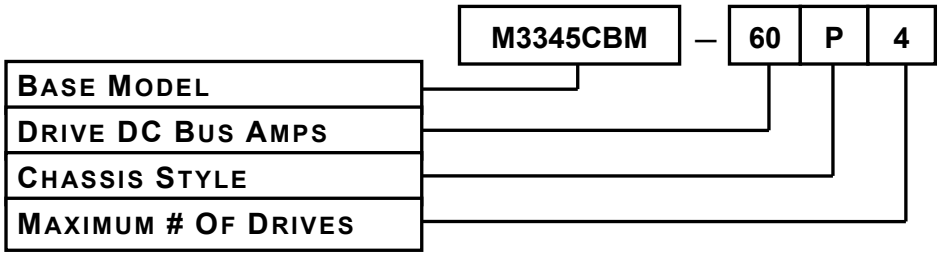

BASE MODEL NUMBER

The Base Model Number for all Common Bus Modules is M3345CBM.

DRIVE DC BUS AMPS

The Drive DC Bus Amps Rating indicates the current rating of each individual drive.

This Rating is entered directly into the part number and will be either 2 or 3 digits.

CHASSIS STYLE

The Chassis Style is determined by the configuration of the module. This is not a selection, but an indicator of the chassis size.

Table 2-1: Chassis Codes

CHX CODE	TYPE AND SIZE (H" x W" x D")
H	8.5 x 8.5 x 5.5
J	8.5 x 15.0 x 5.5
L	13.0 x 12.0 x 8.0
N	14.0 x 15.0 x 8.0
P	15.0 x 24.0 x 8.0
X	13.75 x 6.9 x 9.25

MAXIMUM # OF DRIVES

Indicates the maximum number of drives that can be connected in this configuration.

2.3. GENERAL SPECIFICATIONS

Table 2-2: General Specifications Chart

PARAMETER	SPECIFICATION
Voltage	230 - 600 VAC (Please consult with Bonitron regarding special requirements)
Current	0 – 350ADC
Connections	Drive DC bus Common DC bus Fan / OverTemp (X Chx only)
Fusing	Individual bus connections Common DC bus
Operating Temperature	0°C to +40°C
Storage Temperature	-20°C to + 65°C
Humidity	Below 90% non-condensing
Atmosphere	Free of corrosive gas and conductive dust

2.4. General Precautions and Safety Warnings

DANGER!

- High voltages may be present!
- Never attempt to operate this product with the enclosure cover removed!
- Never attempt to service this product without first disconnecting power to and from the unit.
- Always allow adequate time for residual voltages to drain before opening the enclosure.
- **FAILURE TO HEED THESE WARNINGS MAY RESULT IN SERIOUS INJURY OR DEATH!**

CAUTION!

- Certain components within this product may get hot during operation.
- Always allow ample time for the unit to cool before attempting service on this product.
- Installation and/or removal of this product should only be accomplished by a qualified electrician in accordance with National Electrical Code or equivalent regulations.
- Before attempting installation or removal of this product, be sure to review all system documentation for pertinent safety precautions.
- No user-serviceable parts are contained within this product. Inoperable units should be replaced or returned for repair.
- This product does not provide motor overload protection.

ANY QUESTIONS AS TO APPLICATION, INSTALLATION, OR SERVICE SAFETY SHOULD BE DIRECTED TO THE EQUIPMENT SUPPLIER.

This page intentionally left blank

3. INSTALLATION INSTRUCTIONS

3.1. ENVIRONMENT

- All units require adequate protection from the elements. Open frame modules must be mounted within enclosures of suitable rating for the environment.
- Adequate clearance should be allowed for easy access to terminals and adjustments. This will facilitate inspection and maintenance.
- Sufficient circulation of clean, dry air should be provided. Ambient temperatures should not exceed +40°C (+104°F) nor be less than 0°C (+32°F) and non-condensing. Ambient air should not be contaminated with harmful chemical vapors or excessive dust, dirt, or moisture.

3.2. UNPACKING

Upon receipt of this product, please verify that the product received matches the product that was ordered and that there is no obvious physical damage to the unit. If the wrong product was received or the product is damaged in any way, please contact the supplier from which the product was purchased.

3.3. MOUNTING

The Modules are intended to be mounted in a protective enclosure. The unit will require a minimum clearance of three (3) inches above and below it to allow for proper airflow for cooling.

Refer to Section 6 of this manual to determine the correct mounting dimensions and provisions for the unit.

3.4. WIRING AND CUSTOMER CONNECTIONS

3.4.1. POWER WIRING

WARNING!

Only qualified electricians should perform and maintain the interconnection wiring of this product. All wiring should be done in accordance with local codes.

Wire size should be selected in accordance with local codes, according to the current rating of the braking transistor. In general, the wire type should be selected by the nominal system AC voltage and the current rating of the module. See Figure 6-8 for additional wiring specs.

Table 3-1: Power Wiring Specifications

CHASSIS	TERMINAL	TORQUE
F, H, J	Bus terminal +/-	182 lb-in
	Drive terminal +/-	20 lb-in
L, N, P, X	Bus terminal +/-	182 lb-in
	Drive terminal +/-	182 lb-in

3.4.1.1. DRIVE AC CONNECTION

The AC input to the drives needs to come from the same source. Each drive may have its own choke or line reactor as long as they are all connected to the same secondary of the same transformer. This is to ensure that the rectified AC line voltage on each drive is the same.

3.4.1.2. COMMON DC BUS CONNECTION

The DC bus input should be connected to the common DC bus. Make sure that the DC bus connection polarity is correct. Improper polarity connections carry a high risk of damaging drive equipment if energized.

3.4.1.3. DRIVE CONNECTION

Some drives have a connection to an internal braking transistor. Do **NOT** use this connection. Connect **only** to the DC bus terminals. Make sure that the DC bus connection polarity is correct. Improper polarity connections carry a high risk of damaging drive equipment if energized.

3.4.1.4. COMMON BRAKING CONNECTION

The Common Braking Connection allows for a single braking solution to be provided for all the drives that are common bussed. A line regen or a braking chopper may be connected to the common braking terminals. Alternatively, a single drive with an internal IGBT can provide the braking solution for the associated drives. However, this IGBT needs to be properly sized to handle the application. Please consult with the manufacturer's drive manual.

3.4.1.5. GROUNDING REQUIREMENTS

All units come equipped with either a ground terminal or ground stud that is connected to the module chassis. Ground the chassis in accordance with local codes. Typically, the wire gauge will be the same as is used to ground the attached drive.

3.4.2. I/O WIRING (X CHASSIS ONLY)

3.4.2.1. FAN

TS1 – 1 & 2: 115VAC Fan Power

3.4.2.2. OVERTEMP

TS1 – 3 & 4: 115V 50/60Hz 150mA

Table 3-2: I/O Wiring Specifications

TERMINAL	FUNCTION	ELECTRICAL SPECIFICATIONS	MIN WIRE AWG	MAX WIRE AWG	TORQUE LB-IN
TS1 1&2	Fan Power	115VAC @ 150mA	18	12	3.6 -5.3
TS1 3&4	N.C. Temp Switch	250VAC max @ 2A	18	12	3.6 -5.3

3.5. TYPICAL CONFIGURATIONS

Figure 3-1: Typical Field Wiring

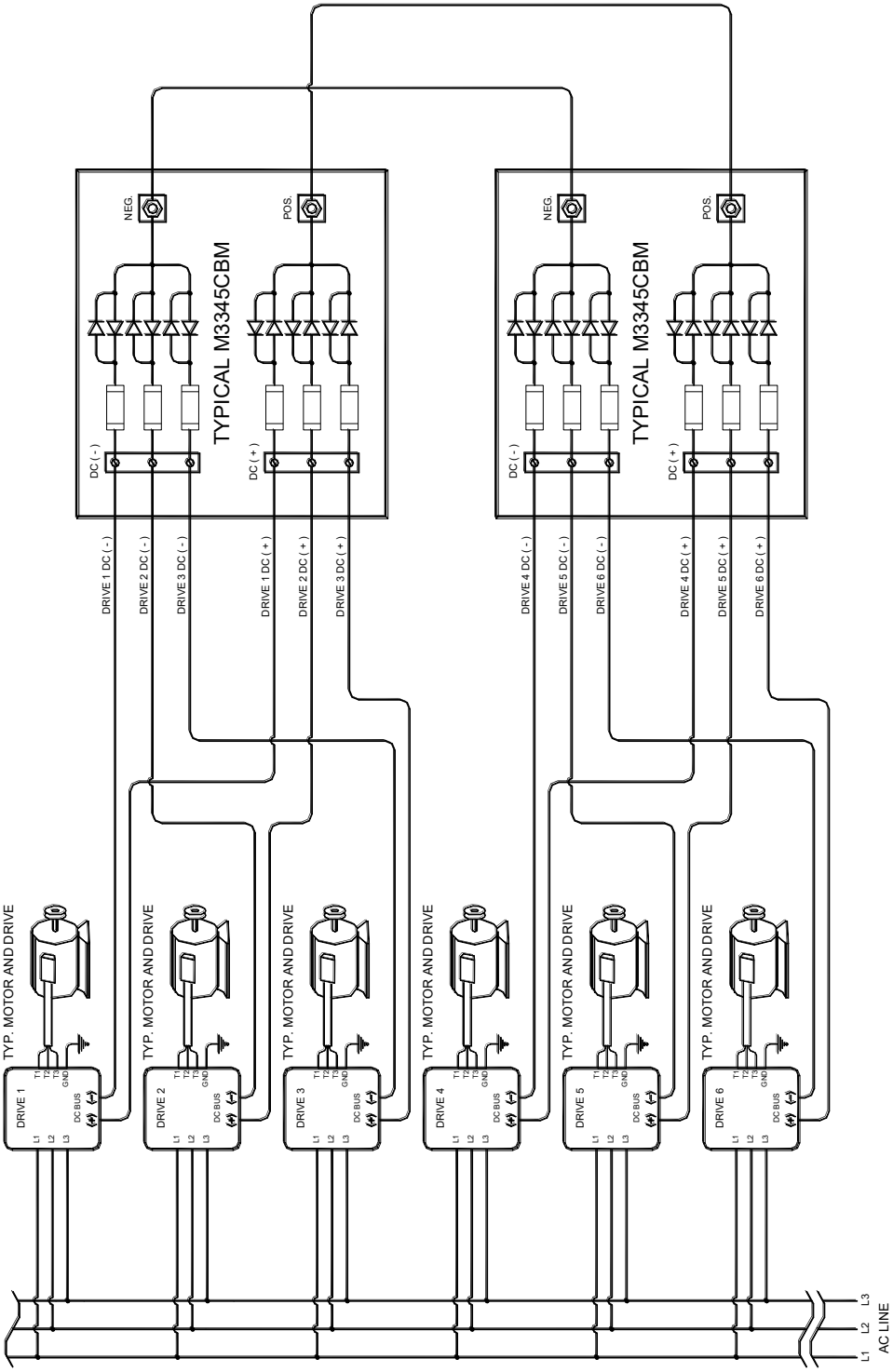

This page intentionally left blank

4. OPERATION

4.1. FUNCTIONAL DESCRIPTION

The Common Bus Module isolates the DC bus connections of multiple drives to keep from generating circulation currents in the AC bridges of the drives. This ensures that the input bridges of each drive do not supply power to other drives in the network, or allow circulating currents between drives. These currents can cause bridge overheating and damage to the drives.

4.2. STARTUP

4.2.1. PRE-POWER CHECKS

Ensure that all connections are tight, DC bus polarity is correct, and that the drives are connected to the proper terminals. Check for exposed conductors that may lead to inadvertent contact or shorting. Ensure that the current rating of the module is suitable for the application.

4.2.2. STARTUP PROCEDURE AND CHECKS

- Check each drive + and – connection, and make sure they are correct.
- Cross connection of the drive buses can cause catastrophic damage to the drives.
- Make sure the incoming line voltage is within tolerance of the drive system and the M3345 Common Bus Module.
- Apply power to the drive system.

4.3. OPERATIONAL ADJUSTMENTS

There are no adjustments necessary to these modules.

This page intentionally left blank

5. MAINTENANCE AND TROUBLESHOOTING

Repairs or modifications to this equipment are to be performed by Bonitron approved personnel only. Any repair or modification to this equipment by personnel not approved by Bonitron will void any warranty remaining on this unit.

5.1. TROUBLESHOOTING

5.1.1. CIRCULATING CURRENTS BETWEEN DRIVES

Make sure the connections are correct between the drives and the Common Bus Module.

5.1.2. DRIVE WILL NOT PRECHARGE

Verify that the DC bus connections are properly connected. Verify the polarity of the DC bus connections.

5.1.3. HEATSINK GETS EXCESSIVELY HOT

Make sure that the connections are correct. Heat can be caused by circulating currents between the drives.
Units with fans should be checked occasionally for dust and debris. They may be cleared with compressed air while power is OFF.

5.1.4. DRIVE OVERVOLTAGE FAULT.

If a drive has an overvoltage fault that is not seen on another drive, this may be the result of power not fully getting to the drive. Check the diodes and the fuses to see if any have become open.

5.1.5. DIODE MODULE IS OVERHEATING

Verify that the unit is clean and free of built-up dust or debris. Verify that the fan is operating.
If overheating persists the unit may be undersized for the application.

5.1.6. DRIVE VOLTAGE VARIES FROM COMMON BUS VOLTAGE

- Check voltage across the M3345CBM fuses. Remove power and replace fuses if voltage >1V.
- Verify that the voltage across the M3345CBM diode is 0.5 → 2.0V.

5.2. TECHNICAL HELP – BEFORE YOU CALL

If possible, please have the following information when calling for technical help:

- Serial number of unit
- Name of original equipment supplier
- Brief description of the application
- Drive and motor hp or kW
- The line to line voltage on all 3 phases
- The DC bus voltage
- kVA rating of power source
- Source configuration Wye/Delta and grounding

This page intentionally left blank

6. ENGINEERING DATA

Table 6-1: M3345CBM Diode Module Load Ratings

PART NUMBER	NUMBER OF DRIVES	NOMINAL HP			TOTAL DRIVE BUS CURRENT	M3345CBM CONT. OUTPUT CURRENT	M3345CBM PEAK OUTPUT CURRENT
		230V	460V	575V			
M3345CBM-10H3	3	3 hp	5 hp	6 hp	10 A	30 A	30 A
M3345CBM-10J6	6	3 hp	5 hp	6 hp	10 A	30 A	60 A
M3345CBM-30H3	3	10 hp	20 hp	25 hp	30 A	30 A	90 A
M3345CBM-30J6	6	10 hp	20 hp	25 hp	30 A	30 A	180 A
M3345CBM-60L2	2	20 hp	40 hp	50 hp	60 A	50 A	120 A
M3345CBM-60L3	3	20 hp	40 hp	50 hp	60 A	50 A	180 A
M3345CBM-60P4	4	20 hp	40 hp	50 hp	60 A	100 A	240 A
M3345CBM-60P6	6	20 hp	40 hp	50 hp	60 A	100 A	360 A
M3345CBM-90N2	2	30 hp	60 hp	75 hp	90 A	100 A	180 A
M3345CBM-90N3	3	30 hp	60 hp	75 hp	90 A	100 A	270 A
M3345CBM-200P2	2	100 hp	200 hp	250 hp	200 A	200 A	400 A
M3345CBM-200X1	1	75 hp	150 hp	185 hp	200 A	200 A	300 A
M3345CBM-250X1	1	100 hp	200 hp	250 hp	250 A	250 A	375 A
M3345CBM-300X1	1	125 hp	250 hp	310 hp	300 A	300 A	450 A
M3345CBM-350X1	1	125 hp	250 hp	310 hp	350 A	300 A	450 A

Table 6-2: M3345CBM Diode Module Fuses and Watt Loss

PART NUMBER	BUS FUSE	WATT LOSS
M3345CBM-10H3	ATM-10	84W
M3345CBM-10J6	ATM-10	84W
M3345CBM-30H3	ATM-30	84W
M3345CBM-30J6	ATM-30	84W
M3345CBM-60L2	A70QS60	140W
M3345CBM-60L3	A70QS60	140W
M3345CBM-60P4	A70QS60	280W
M3345CBM-60P6	A70QS60	280W
M3345CBM-90N2	A70QS100	280W
M3345CBM-90N3	A70QS60	280W
M3345CBM-200P2	FWP-200	560W
M3345CBM-200X1	A70Q200	360W
M3345CBM-250X1	A70Q250	455W
M3345CBM-300X1	A70Q300	550W
M3345CBM-350X1	A70Q350	550W

6.1. DIMENSIONS AND MECHANICAL DRAWINGS

Figure 6-1: Typical "H" Chassis

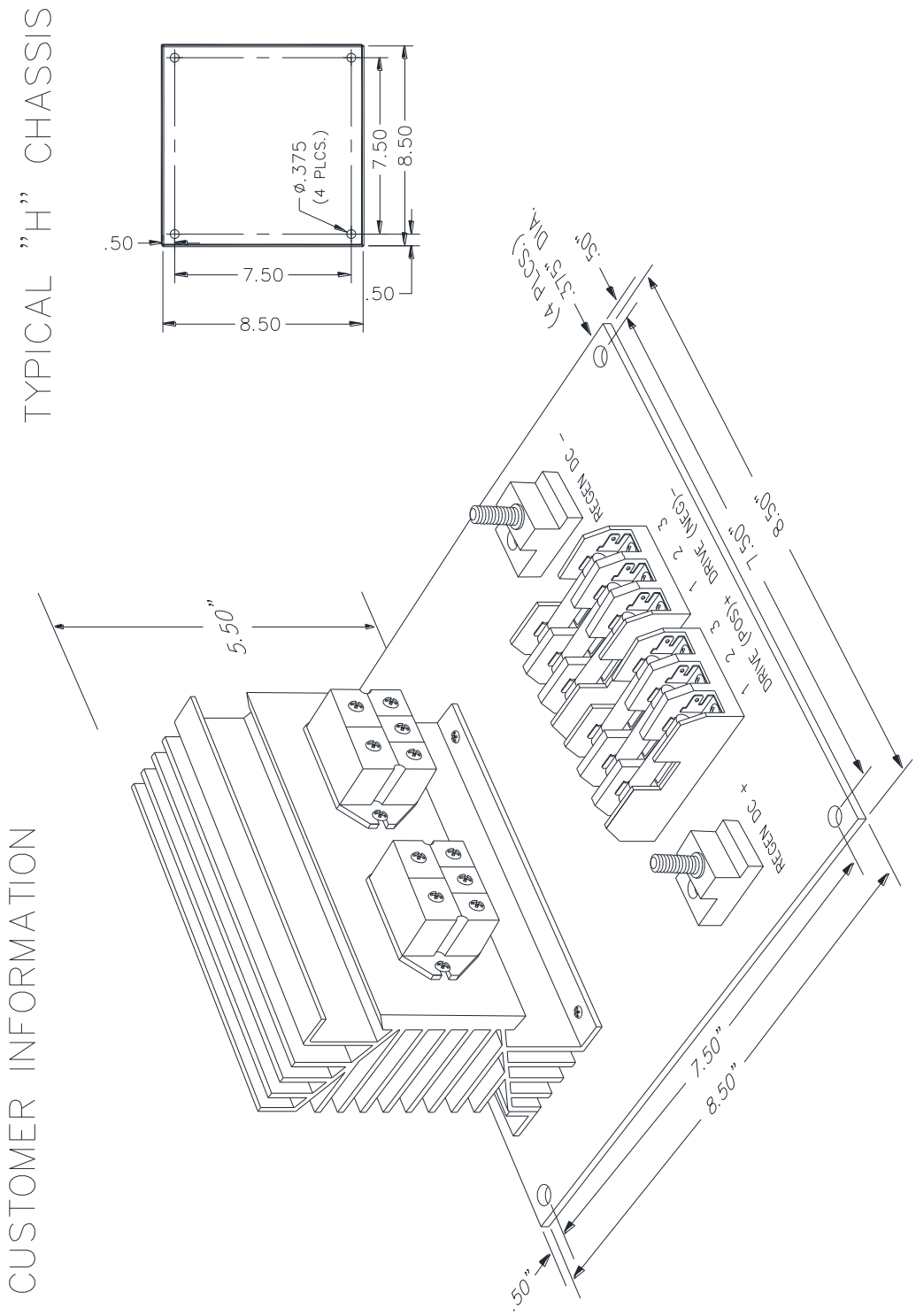

Figure 6-2: Typical "J" Chassis

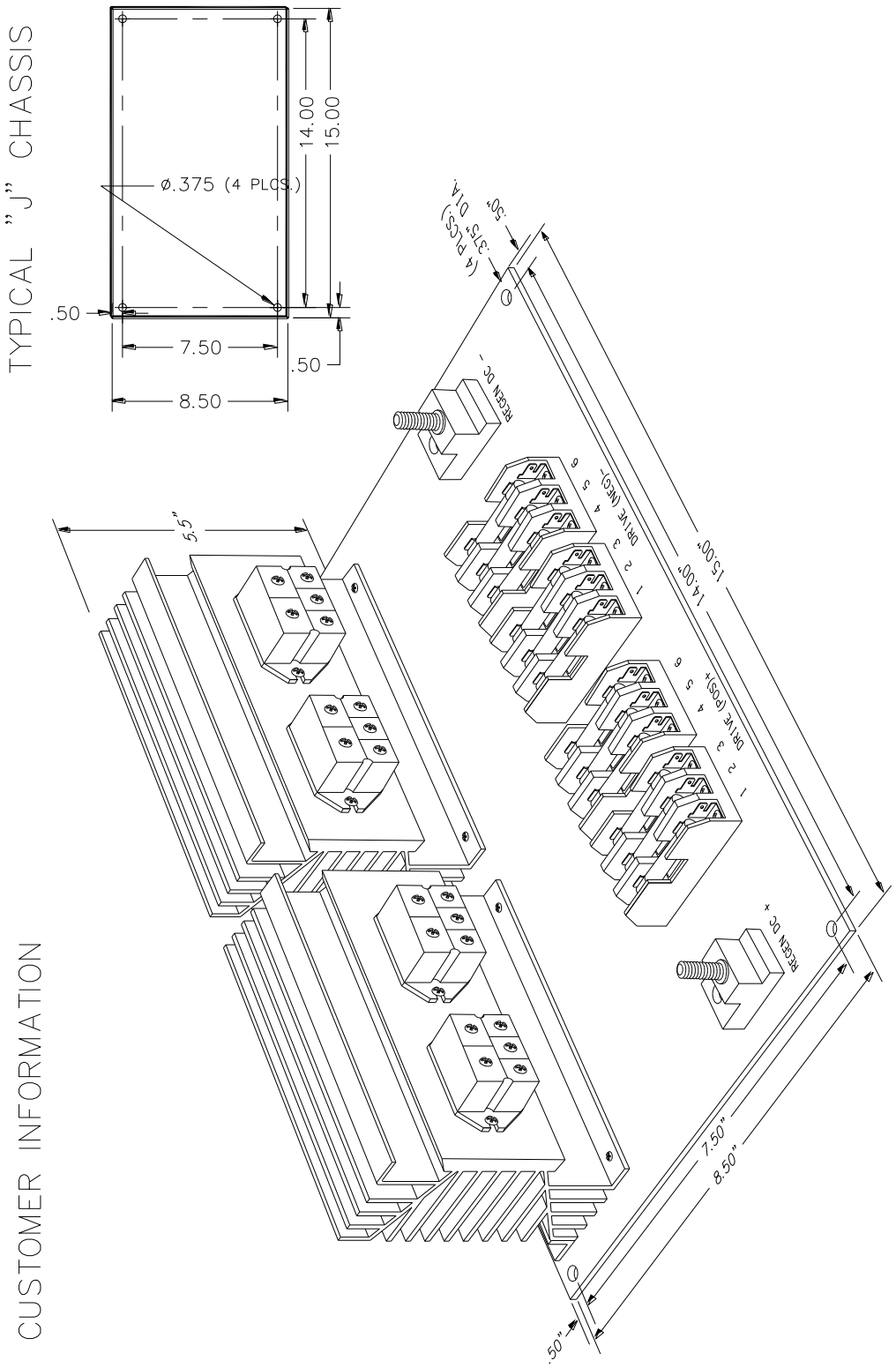

Figure 6-3: Typical "L" Chassis

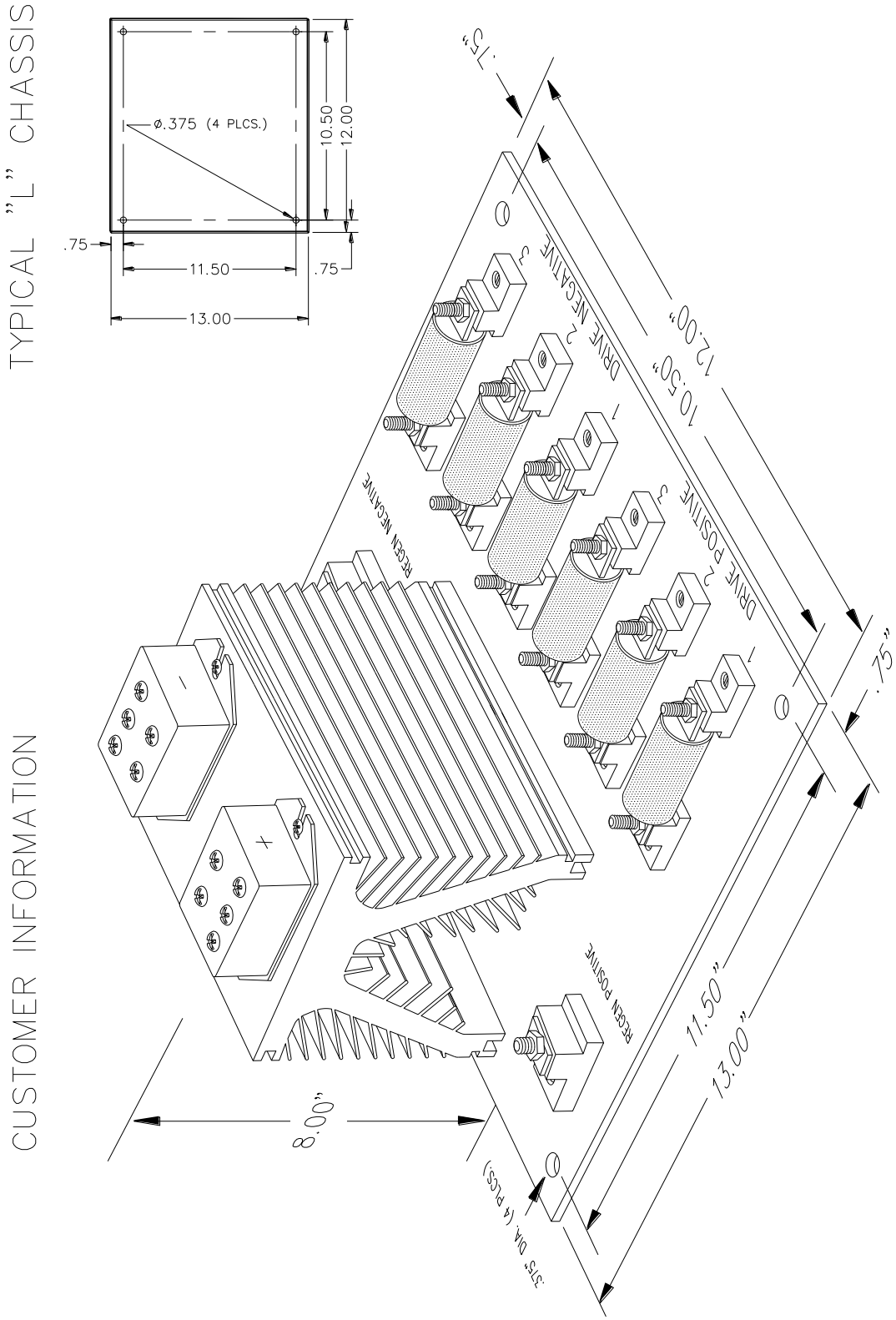

Figure 6-4: Typical "N" Chassis

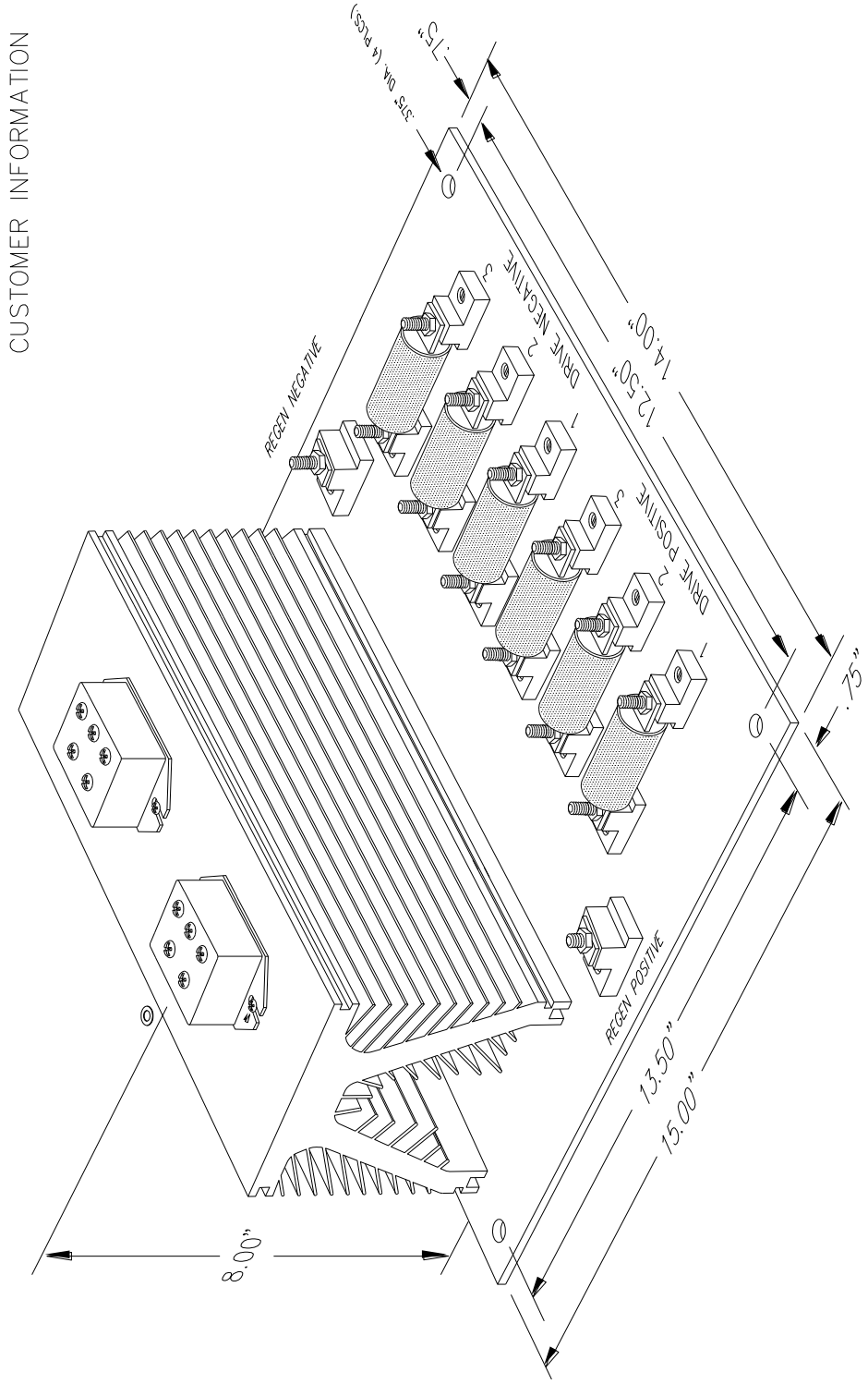

Figure 6-5: Typical "P" Chassis

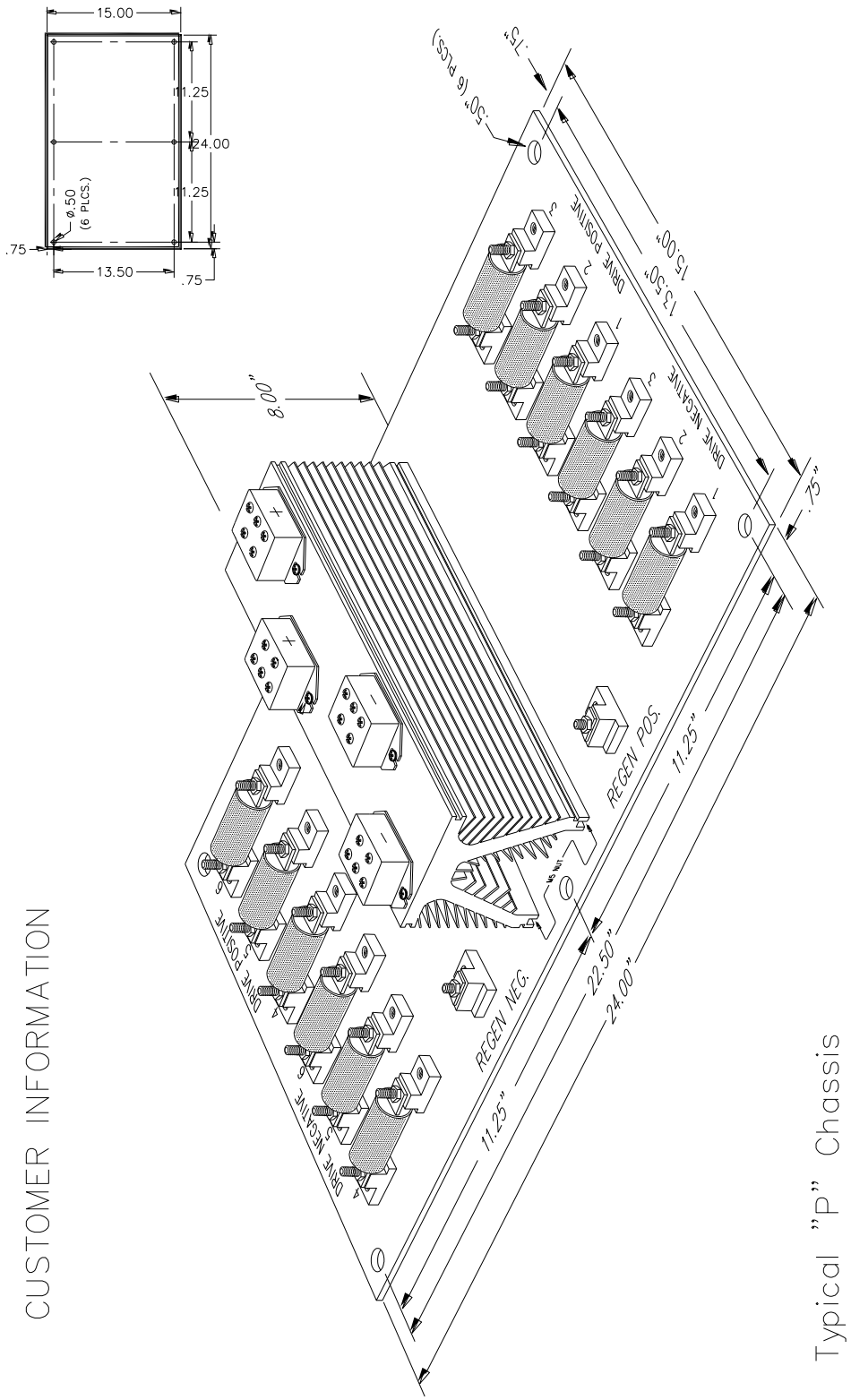

Figure 6-6: Typical "P2" Chassis

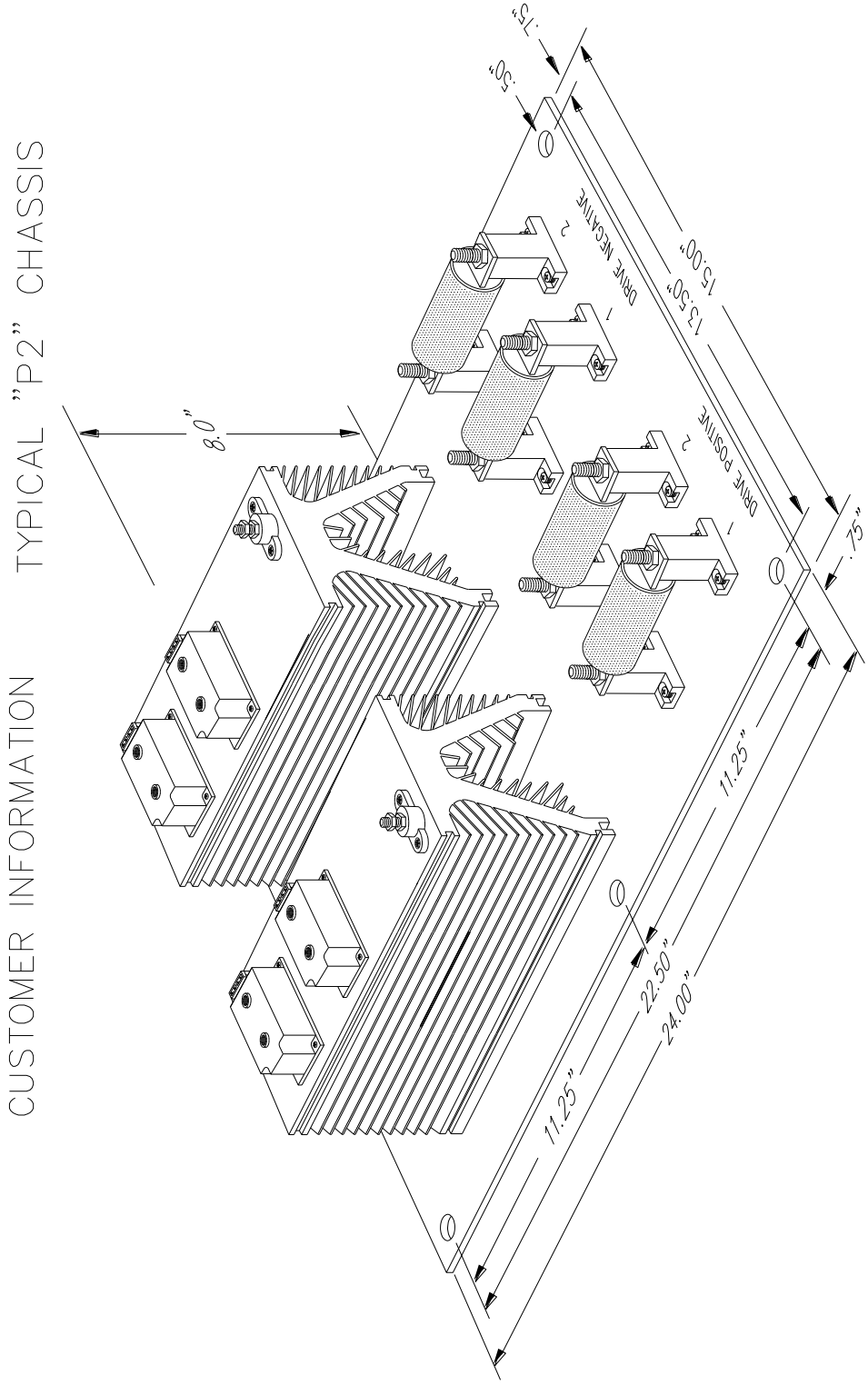

Figure 6-7: Typical "X" Chassis

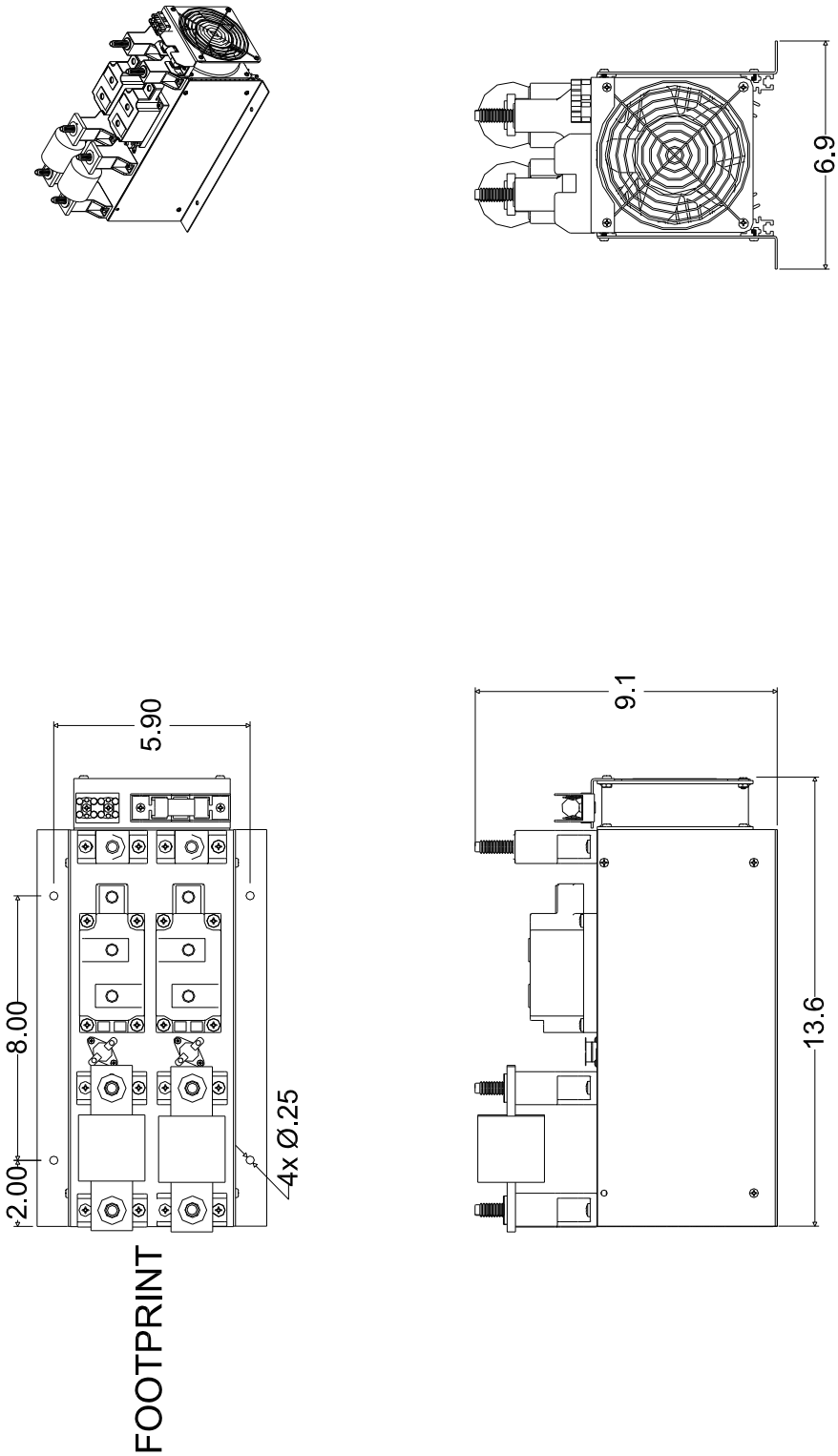

6.2. SUPPLEMENTAL DRAWINGS

Figure 6-8: P6 Chassis Connections for Six Drives, with Wiring

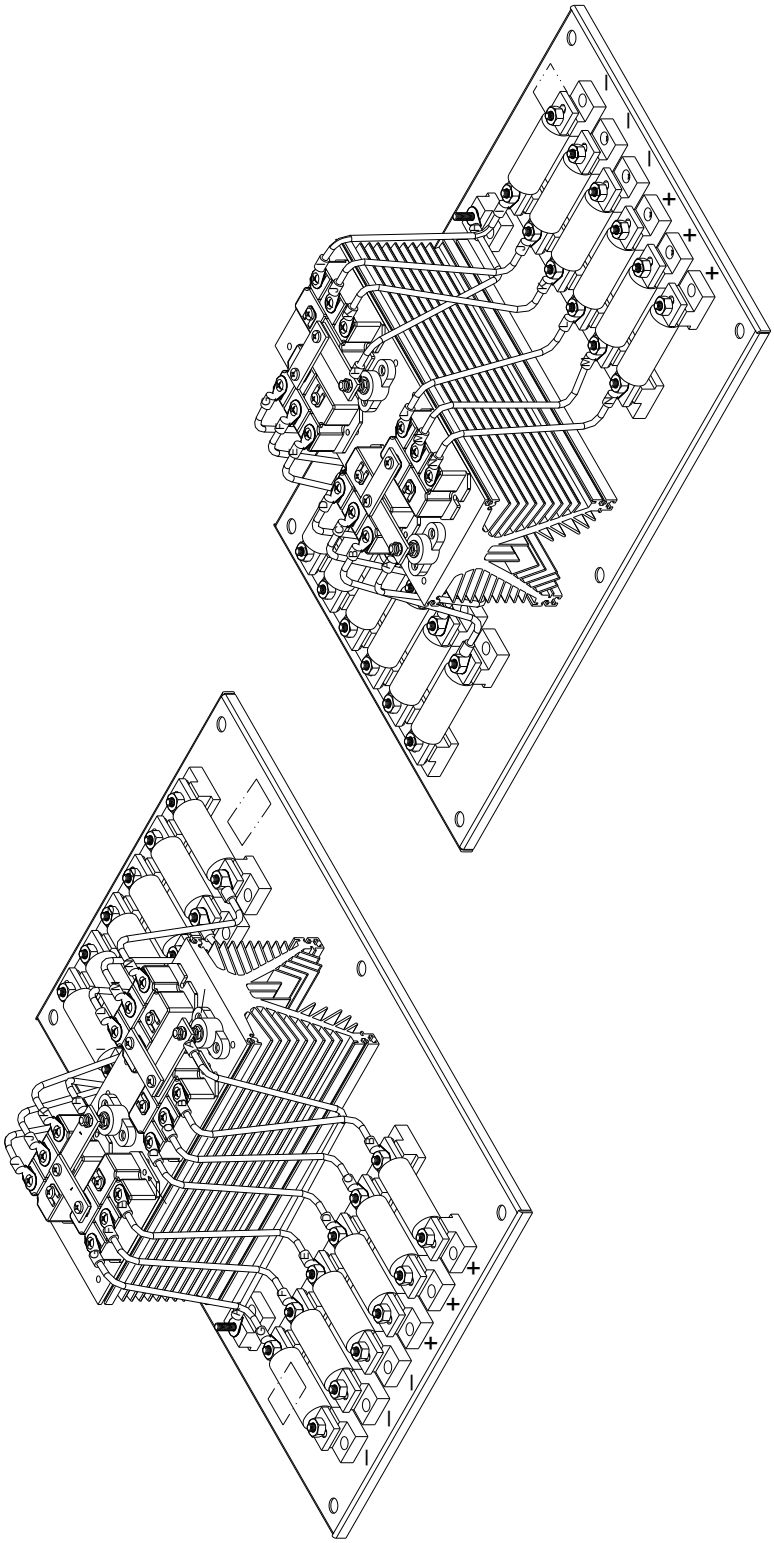

Figure 6-9: P4 Chassis Connections for Four Drives, with Wiring

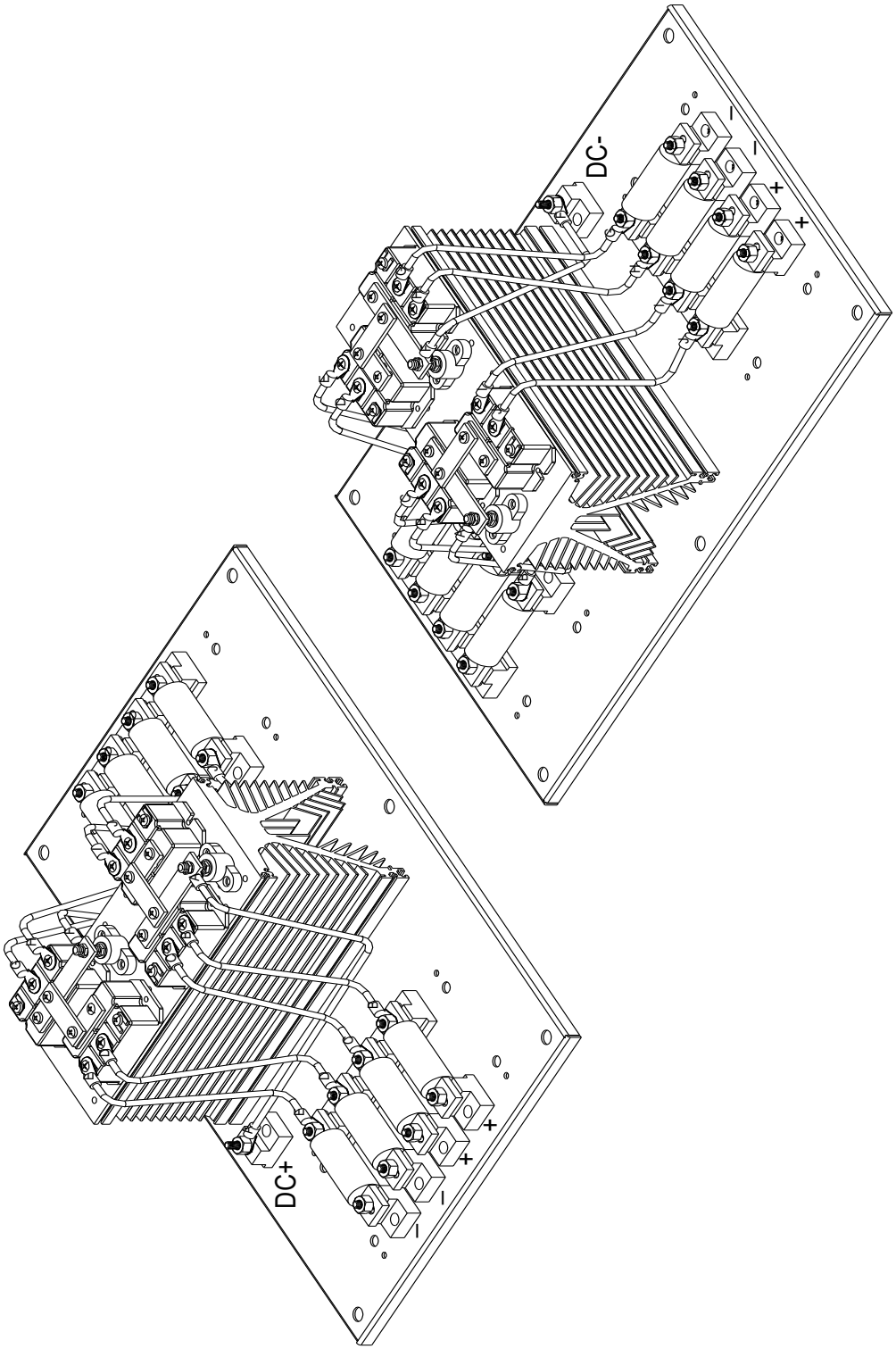

This page intentionally left blank

7. APPENDIX

7.1. APPLICATION NOTES

In multiple drive systems, it can be useful to connect the DC buses of the drives in parallel. This can allow drives in the lineup that are regenerating power (as during braking) to supply power directly to the other drives in the lineup that are motoring.

During regeneration, the DC bus level of a drive will rise. By connecting the DC bus of the motoring drive to the DC bus of the regenerating drive, the energy can be used by the motoring drive and can reduce the energy wasted as heat through resistive braking. Likewise, if there is a common DC bus, a single braking solution can be used for the whole system.

Some examples:

- Crane applications with multiple small trolley motors can be connected to a single hoist.
- Draw lines where some drives may be overhauled.
- CNC or multiple drive systems where all drives may not be operating simultaneously.

When the DC buses of multiple drives are connected with a common AC bus, there are multiple AC input bridges in parallel. Slight differences between the input bridges and input impedances can cause some bridges to carry more current than others, or to have circulating currents between the drives. This is especially true with drives that have different frame sizes.

The amount of circulating current depends on the actual installation conditions, and will be affected by the input impedance to each drive as well as the actual voltage drop across the input bridge diodes. It is typical that smaller drives in a system have higher valued input reactors, so the input currents would normally go through the lower impedance reactors on the higher horsepower drives of a system.

The back-to-back diodes add a diode voltage drop between the parallel bridges in each drive to further reduce circulating currents between the parallel bridges, and allow the load sharing and common braking system. This method does not completely eliminate the circulating currents, but greatly reduces them.

There are individual semiconductor type fuses in the M3345CBM modules that will protect the individual drives from excessive overcurrent should there be any faults.

7.2. INSTALLATION NOTES

7.2.1. DC BUS INDUCTANCE

DC bus connections should be kept as short as possible to minimize inductance between drives. This inductance can cause high voltages between the drives during switching.

7.2.2. AC SUPPLY AND PRECHARGE

The M3345CBM Modules do not fully isolate the drives from one another. If AC power is removed from one drive in the system, the drive will still be powered through the DC bus by the other connected drives. Power must be removed and applied at the same time through a common disconnect or circuit breaker.

Since all the capacitors of all the drives will be connected, you will need to

ensure that the precharge system is integrated below the DC input of the drive so that drives will not be precharged through other drive's bridges.

7.2.3. SIZING

The M3345CBM is selected based on the maximum DC regen current per drive. This will generally be based on the size of the largest drive in the application. Bonitron does not recommend sharing more than 200 amps of regen current. Applications involving more than 200 amps of regen should be reviewed with Bonitron Engineering. Custom configurations may be designed for specialized applications or high volumes.

Example: System has two (2) 50hp drives and one (1) 25hp drive.

- The largest drive is 50hp.
- From Table 6-1 select the 90 amp module for 3 drives, the M3345CBM-90N3.

This page intentionally left blank

NOTES